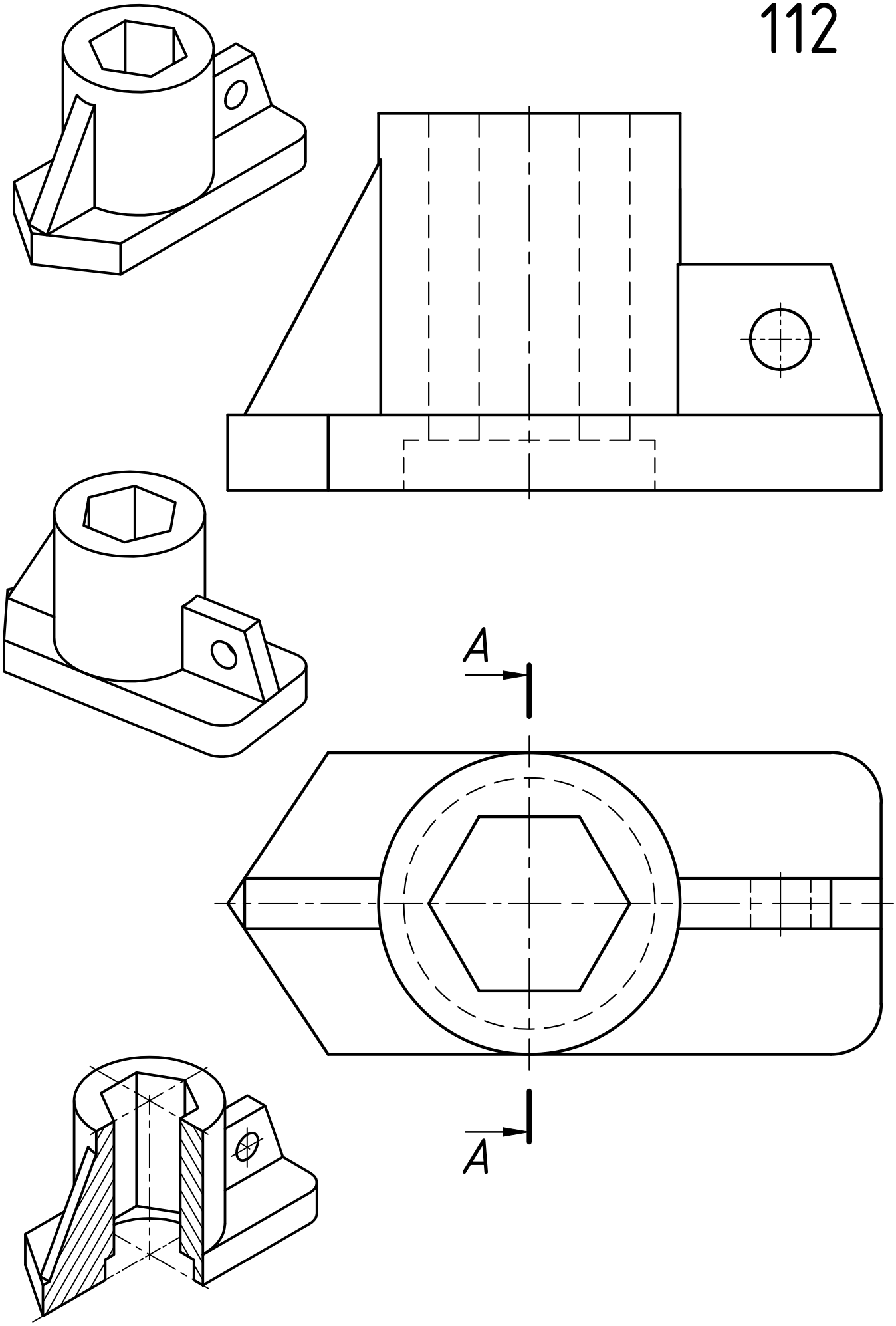
A
A